PMC Drawing Number:SR-008-□□□□□

1. Material:30P PVC, UL94V-2, DEHP, DINP is less than 0.1%.
2. Color Available: RD=Red, OR=Orange, YL=Yellow, GN=Green, BL=Blue, PU=Purple, BK=Black，GY=Gray, WH=White, BE=Ivory, CR=Clear
3. Inner Diameter Available :5.0mm=50, 5.5mm=55, 6.0mm=60, 6.5mm=65
4. Packaging Quantity: Ⓢ=1000pcs, Ⓣ=500pcs, Ⓤ=250pcs, Ⓥ= 200pcs, Ⓦ=100pcs, Ⓧ= 50pcs, Ⓨ= 25pcs, Ⓩ= 10pcs

SR-008-□□□□□
- Packaging Quantity(S, T, U, V, W, X, Y, Z)
- Inner Diameter:(50, 55, 60, 65)
- Color (RD, OR, YL, GN, BL, PU, BK, GY, WH, BE, CR)

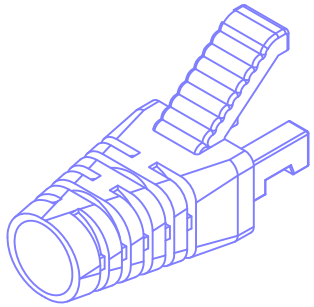

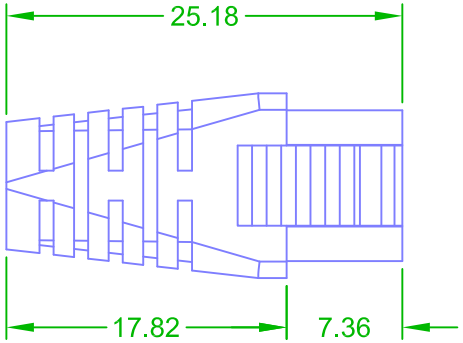

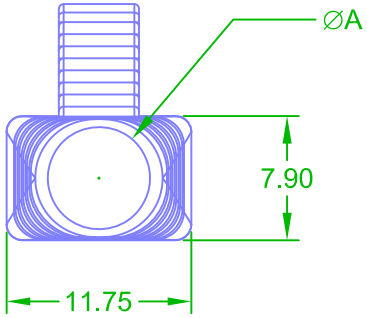

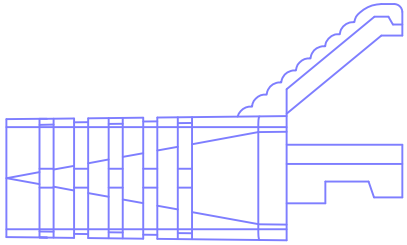

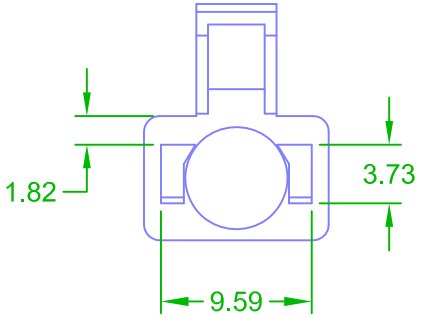

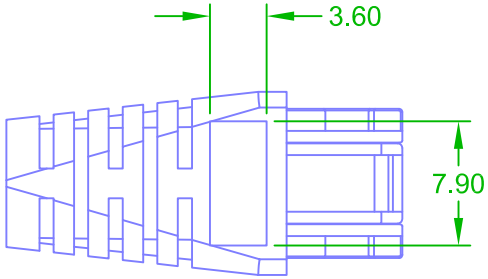

NOTE TOL:±0.15

C	2020.12.03. Revised Date	3RD		Drawing	Chidy	Date	2015/07/16	Part No.	SR-008
A	An initial version	Unit	m/m	Checked	Chris	Date	2015/07/16	Description	
Rev	Description	Scale	1:1	Approved	Jason	Date	2015/07/16	Plug Boot	

Plug Master
INDUSTRIAL CO.,LTD
www.plugmaster.com.tw